Fantastic Furniture

Version 1.0

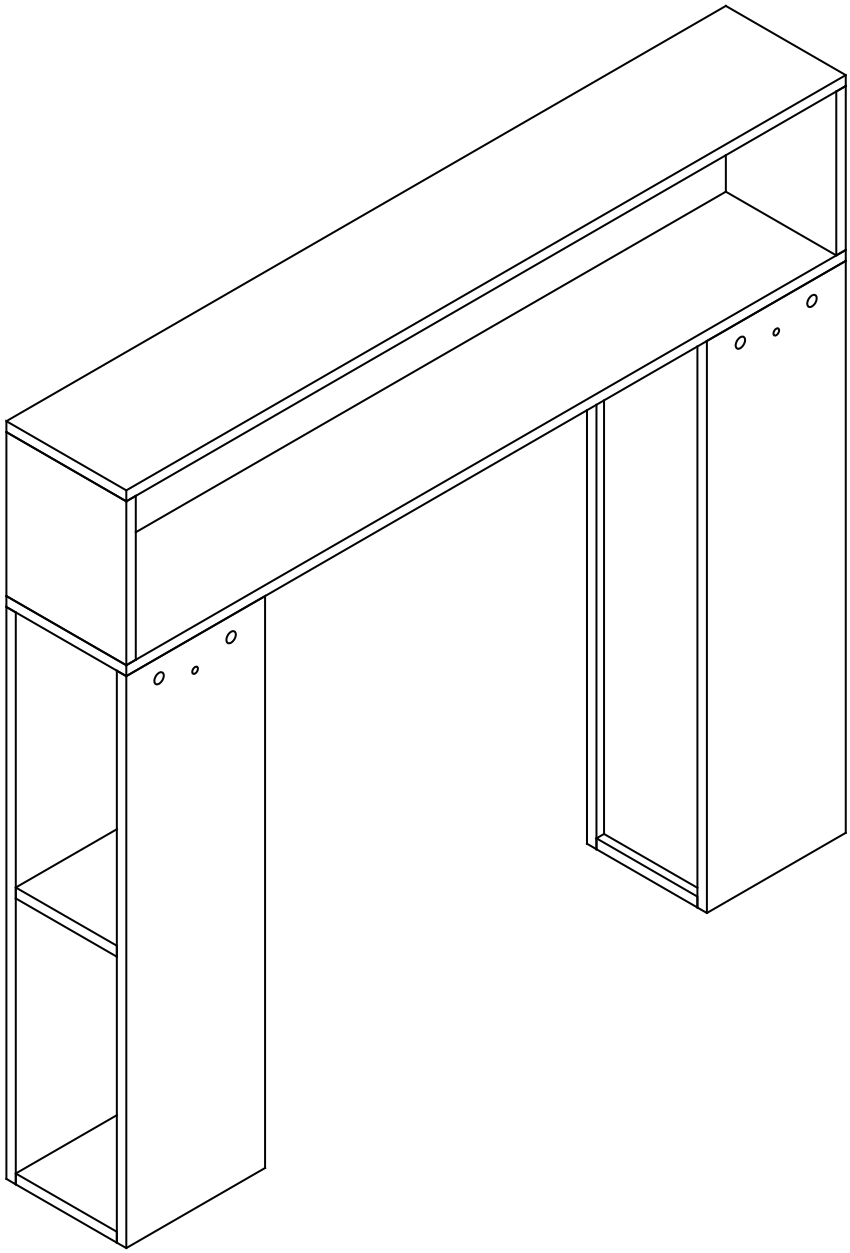

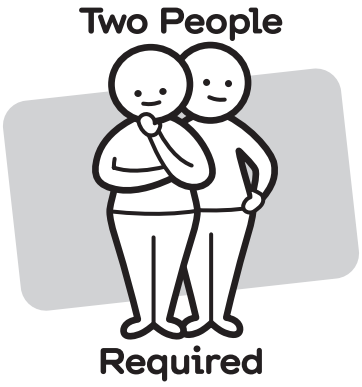

Como

Bed Head King Single

fantasticfurniture.com.au

Recommended weight capacity : 30kg.

Looks like you've found your Fantastic!

We're thrilled you've chosen Fantastic Furniture to help create a home you'll love!

Fantastic Furniture

Love it? Share it!

Fantastic buy! Share how it looks at home on Instagram for your chance to win a $250 Fantastic Furniture Gift Card!
@fantasticfurniture

Assembly Checklist

Read through the instructions carefully before you begin.

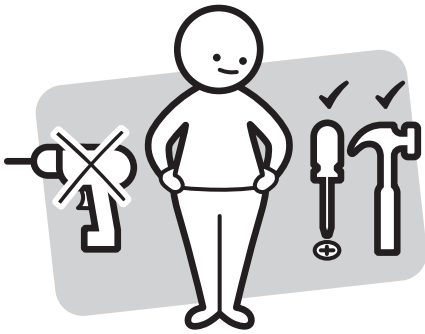

Make sure you have all the required tools. Never use power tools unless instructed.

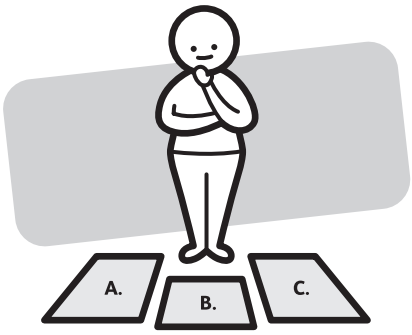

Identify and lay out all of the components before you begin assembly.

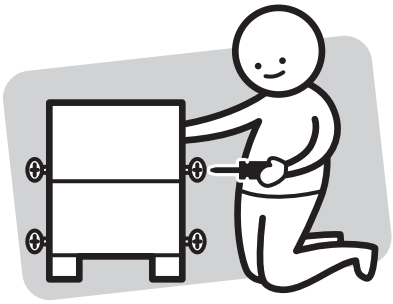

Unless instructed, do not fully tighten screws until the item is fully assembled.

Useful Information

! Never use power tools unless specifically instructed. They can damage your components or hardware if used incorrectly.

! The most common mistakes made during assembly are using the wrong hardware or getting components back to front.

! Always use a soft surface (such as carpet or cardboard) when assembling your product to avoid scratching or damaging the surface of the product.

! Bulky items such as wardrobes and bunk beds should be assembled in the room they will be used as they may not fit through a door once assembled.

! Never use any glue until you are certain that the parts belong together.

! Periodically check and re-tighten all fasteners. Check the product care label or website for product care instructions.

! If you are having any difficulties assembling your product, missing any hardware or components please visit our website Help Centre for further assistance.

! Please see page 2 for any safety requirements or weight restrictions.

What you need
to assemble the product

Other tools you need:
Phillips head screwdriver;
Hammer

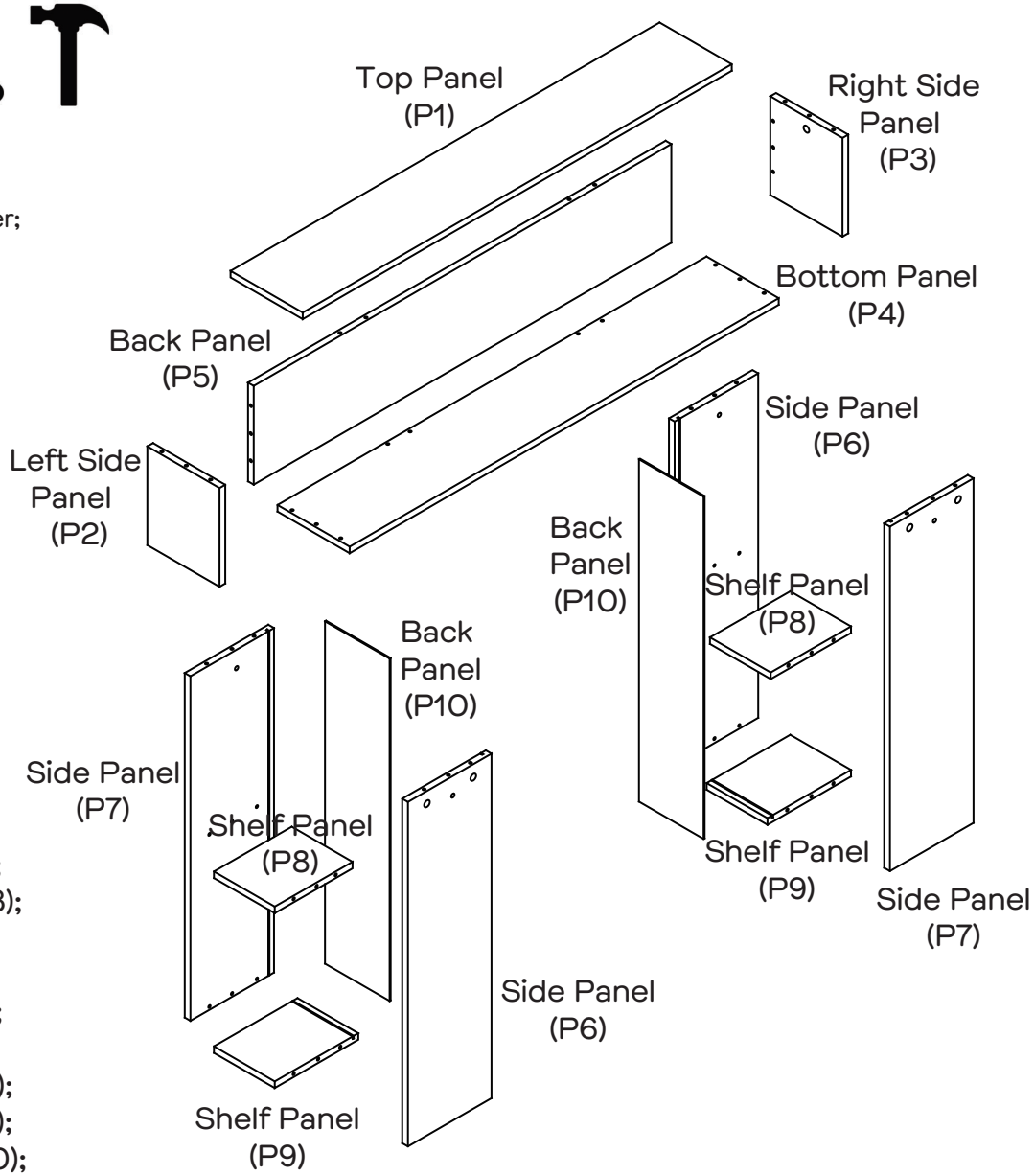

Parts list
Top Panel (P1);
Left Side Panel (P2);
Right Side Panel (P3);
Bottom Panel (P4);
Back Panel (P5);
2 x Side Panels (P6);
2 x Side Panels (P7);
2 x Shelf Panels (P8);
2 x Shelf Panels (P9);
2 x Back Panels (P10);

Hardware pack

28 x Dowels (H1)	4 x Long Screws (H2)	30 x Cam Bolts (H3)	30 x Cam Nuts (H4)	8 x Plastic Glides (H5)	2 x Long Bolts (H6)	1 x Allen Key (H7)

Step 1

You will need	
2 x Cam Bolts (H3)	Phillips head screwdriver

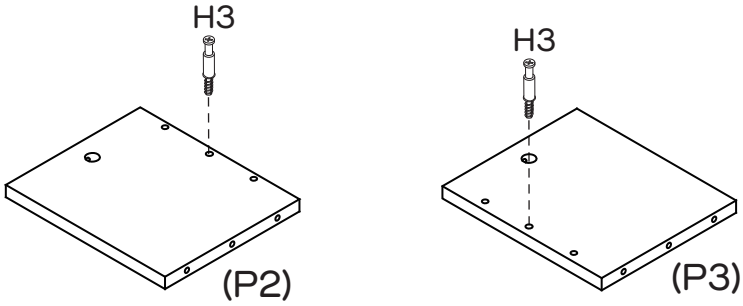

Attach 2 x Cam Bolts (H3) into Side Panels (P2, P3) as shown.

Step 2

You will need	
4 x Dowels (H1)	2 x Cam Nuts (H4)
Phillips head screwdriver	

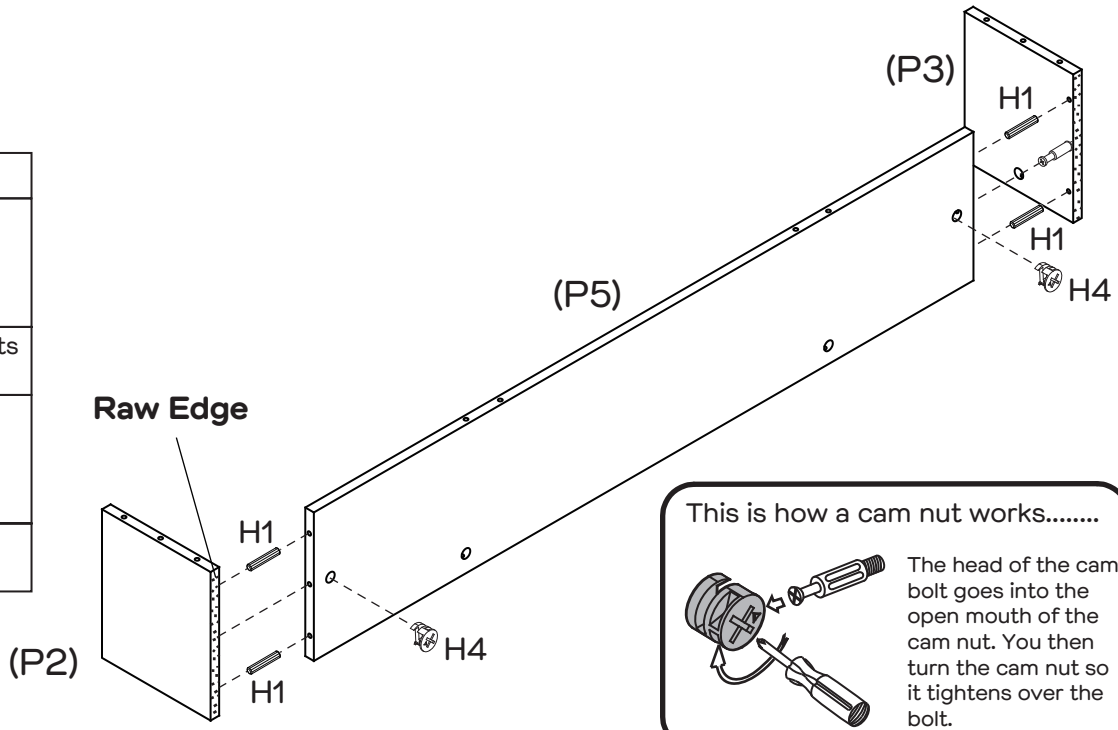

This is how a cam nut works.....

The head of the cam bolt goes into the open mouth of the cam nut. You then turn the cam nut so it tightens over the bolt.

Insert 4 x Dowels (H1) into the holes of Back Panel (P5).
Insert 2 x Cam Nuts (H4) into the holes of Back Panel (P5).
Rotate the cam nuts so the arrows point towards the incoming cam bolts.
Attach Side Panels (P2, P3) to Back Panel (P5), then tighten the cam nuts using the Phillips Head Screwdriver.

Step 3

You will need	
6 x Dowels (H1)	4 x Cam Bolts (H3)
Phillips head screwdriver	

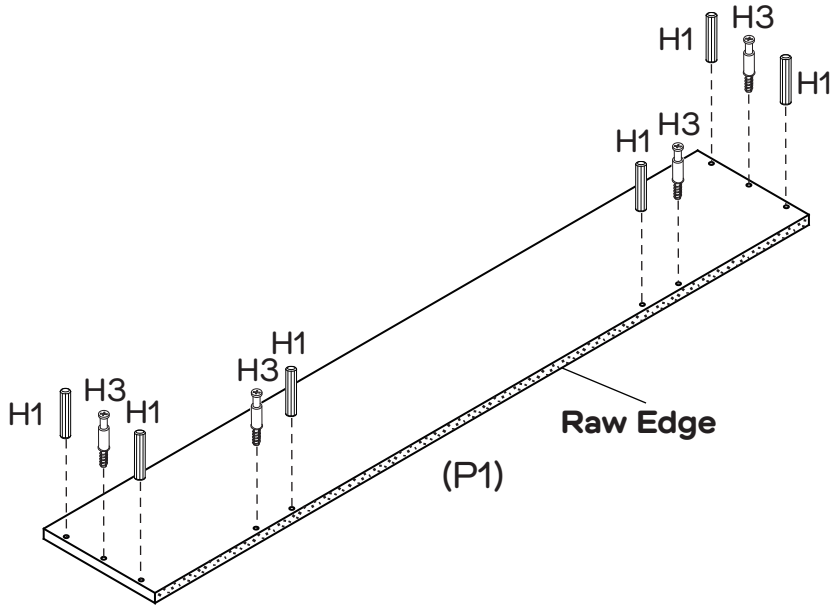

Insert 6 x Dowels (H1) into the holes of Top Panel (P1).
Attach 4 x Cam Bolts (H3) into Top Panel (P1) as shown.

Step 4

You will need	
4 x Cam Nuts (H4)	Phillips head screwdriver

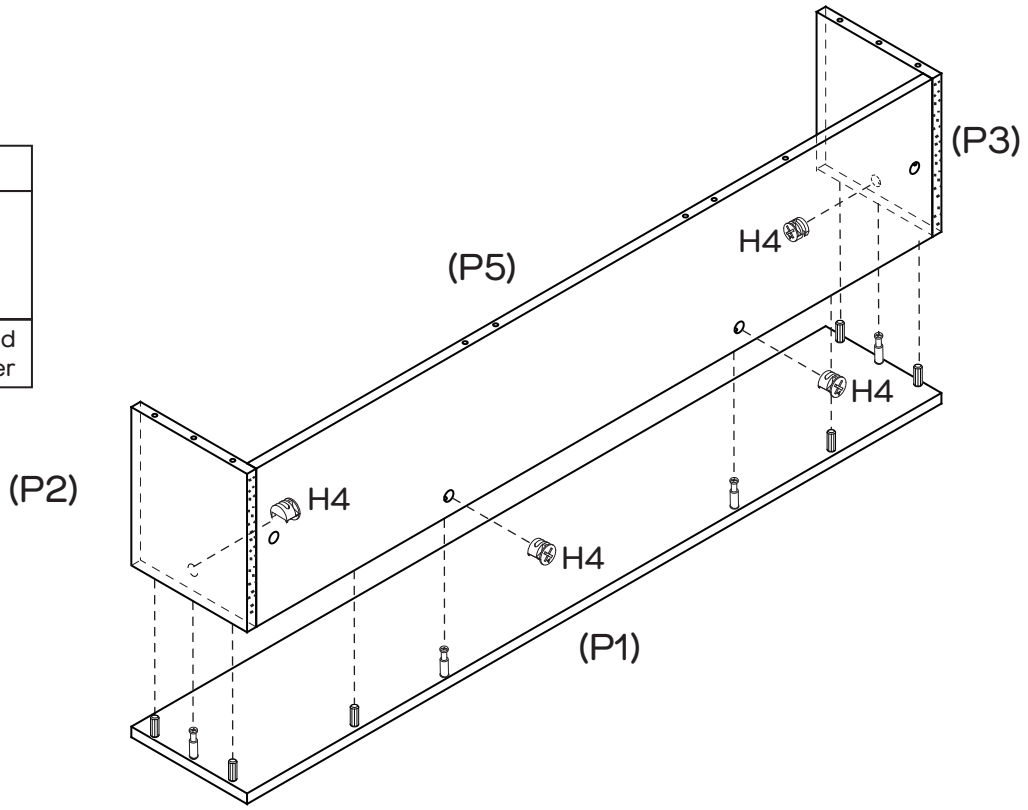

Insert 4 x Cam Nuts (H4) into the holes of Back Panel (P5) and Side Panels (P2, P3).
Rotate the cam nuts so the arrows point towards the incoming cam bolts.
Push Top Panel (P1) into place, then tighten the cam nuts using the Phillips Head Screwdriver.

Step 5

You will need	
6 x Dowels (H1)	4 x Long Screws(H2)
Phillips head screwdriver	

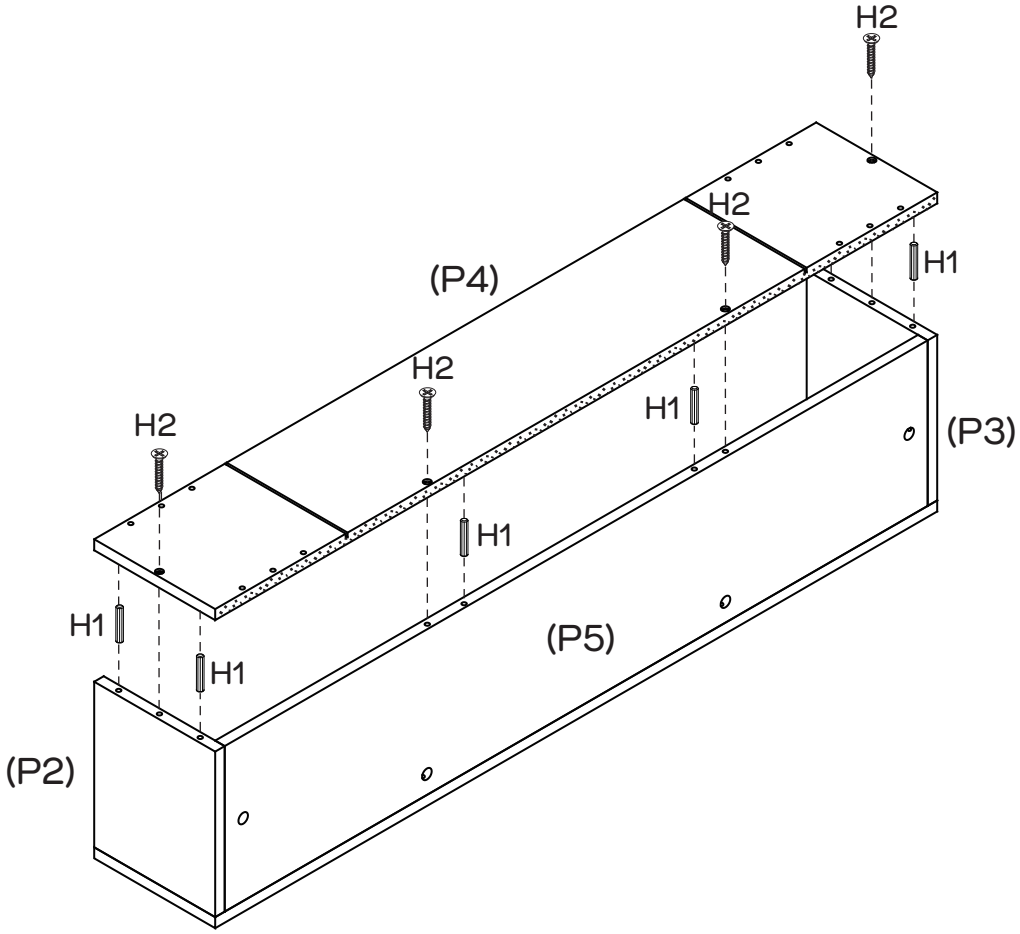

Insert 6 x Dowels (H1) into the holes of Side Panels (P2, P3) and Back Panel (P5).
Attach Bottom Panel (P4) to the right place with 4 x Long Screws (H2)
using a Philips head screwdriver.

Step 6

You will need	
4 x Dowels (H1)	8 x Cam Bolts (H3)
Phillips head screwdriver	

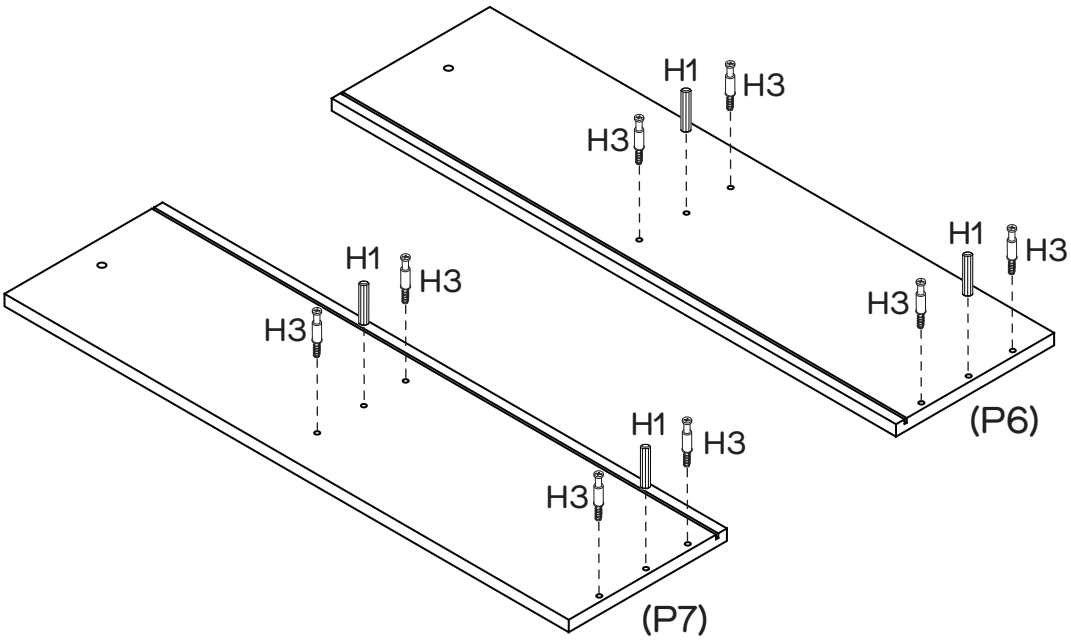

Insert 4 x Dowels (H1) into the holes of Side Panels (P6, P7).
Attach 8 x Cam Bolts (H3) into Side Panels (P6, P7) as Shown.

Step 7

You will need	
8 x Cam Nuts (H4)	Phillips head screwdriver

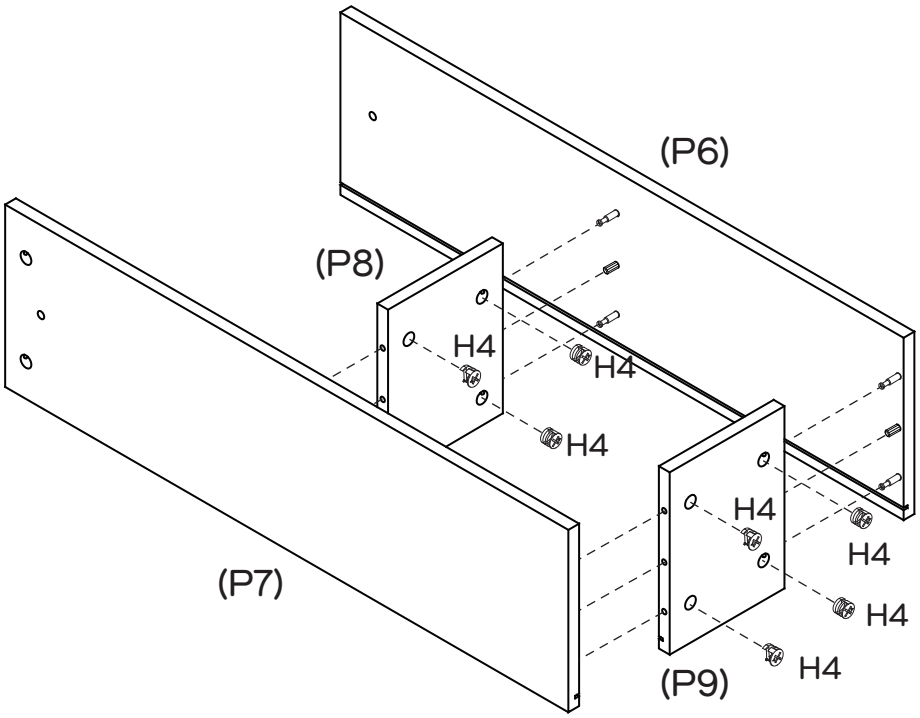

Insert 8 x Cam Nuts (H4) into the holes of Shelf Panels (P8, P9).
Rotate the cam nuts so the arrows point towards the incoming cam bolts.
Push Side Panels (P6, P7) into place,
then tighten the cam nuts using the Phillips Head Screwdriver.

Step 8

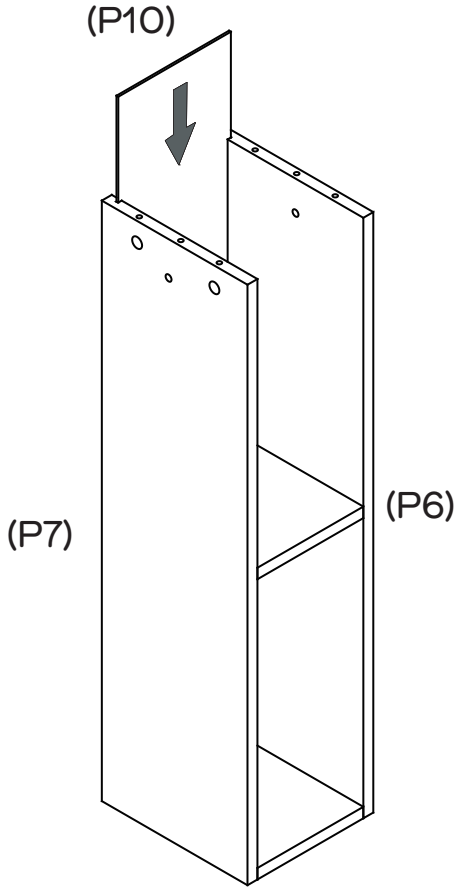

Put Back Panel (P10) into the grooves of Side Panels (P6, P7) as shown.
Repeat Step 6 to Step 8 for the other Side Panels (P6, P7),
Shelf Panels (P8, P9) and Back Panel (P10).

Step 9

You will need	
4 x Dowels (H1)	8 x Cam Bolts (H3)
Phillips head screwdriver	

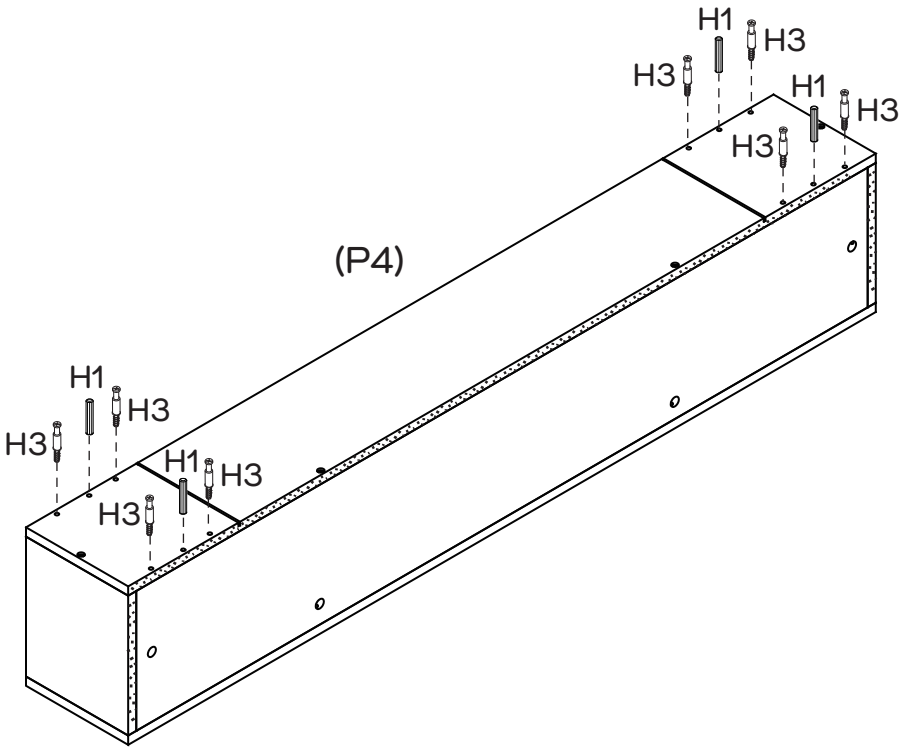

Insert 4 x Dowels (H1) into the holes of Bottom Panel (P4).
Attach 8 x Cam Bolts (H3) into Bottom Panel (P4) as Shown.

Step 10

You will need	
8 x Cam Nuts (H4)	8 x Plastic Glides (H5)
Phillips head screwdriver	Hammer

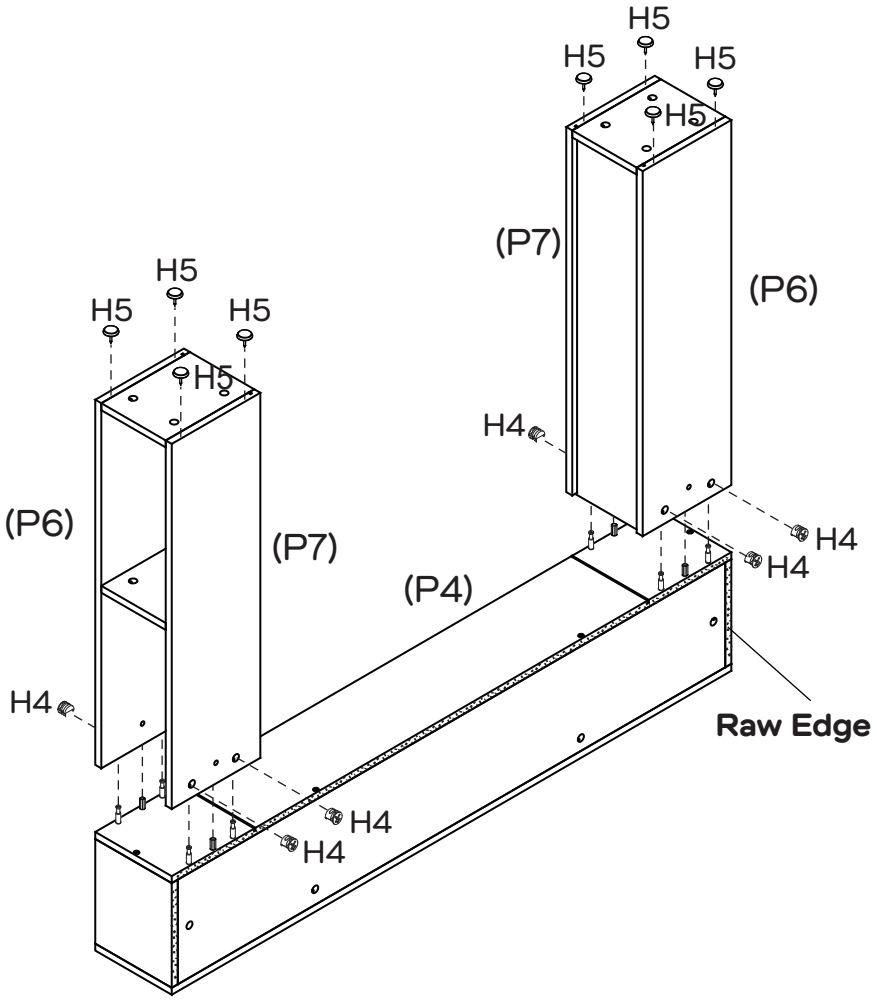

Insert 8 x Cam Nuts (H4) into the holes of Side Panels (P6, P7).
Rotate the cam nuts so the arrows point towards the incoming cam bolts.
Push the two frame into place, then tighten the cam nuts using the Phillips Head Screwdriver.
Hammer 8 x Plastic Glides (H5) on the bottom of Side Panels (P6, P7) as shown.

Step 11

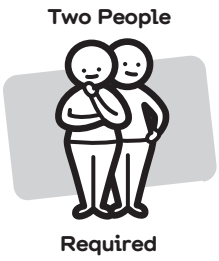

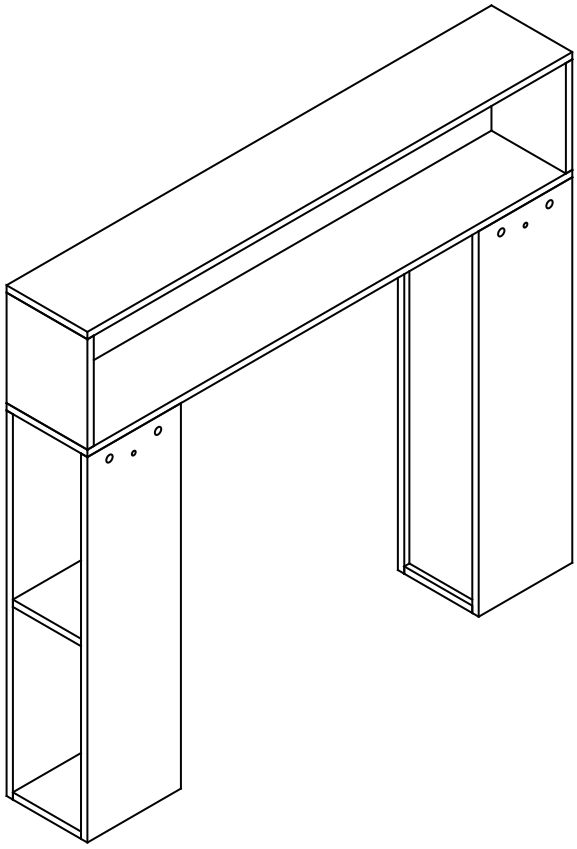

Carefully turn the storage over to an upright position.

Step 12

You will need	
2 x Long Bolts (H6)	1 x Allen Key (H7)

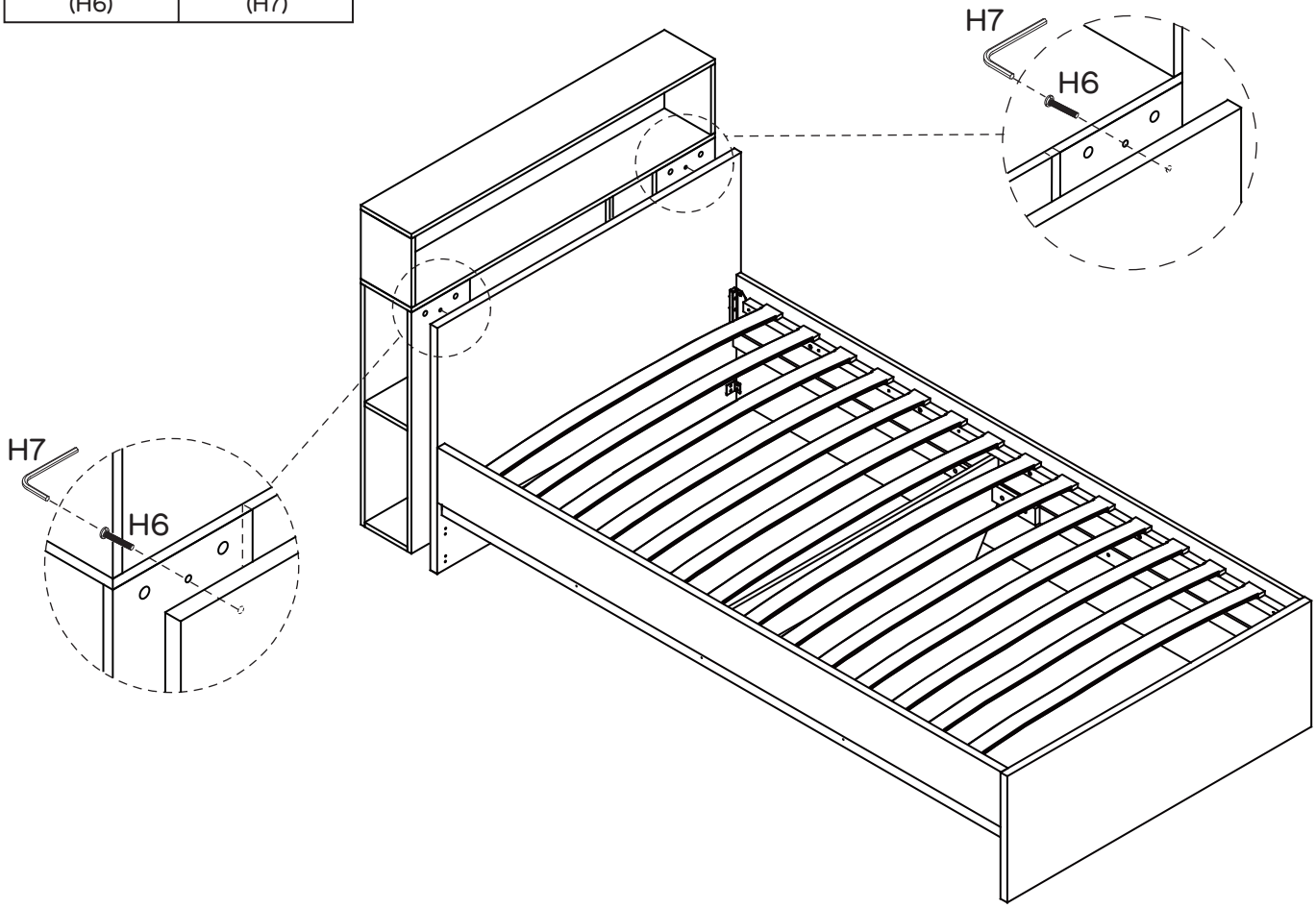

Attach the storage to bedhead with 2 x Long Bolts (H6) using Allen Key (H7).

Job Complete!

In the interest of our environment please dispose of all packaging thoughtfully.